Mengenregler

FLOW REGULATOR VALVES

Drosselrückschlagventil - einstellbar

TYPE

VRF

HYDRAULIC DIAGRAM

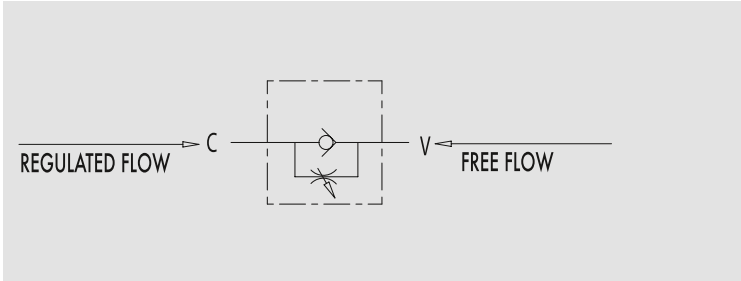

BARREL FLOW CONTROL VALVES WITH CHECK

USE AND OPERATION:

This valve is used to adjust flow speed of actuators in one direction; flow is free in the reverse one. As pressure compensation is not provided, flow adjustment depends on pressure and oil viscosity.

MATERIALS AND FEATURES:

Body: zinc-plated steel
Internal parts: hardened and ground steel
Seal: BUNA N standard
Tightness: by diameter combination. Minor leakage with closed valve

APPLICATIONS:

Connect V to the pressure flow and C to the actuator to set. The flow is adjusted from C to V and free in the reverse direction. When used on actuator with double pilot check valve, VRF has to be mounted between the actuator and the double pilot check valve. Flow adjustment is made by rotating the coupling: by clockwise rotation flow increases and vice versa. Once the flow has been set, lock the nut in order to keep the desired settings even in case of vibrations.

PRESSURE DROPS CURVE

Oil temperature: 50° C - Oil viscosity: 30 cSt

FULLY CLOSED THROTTLE

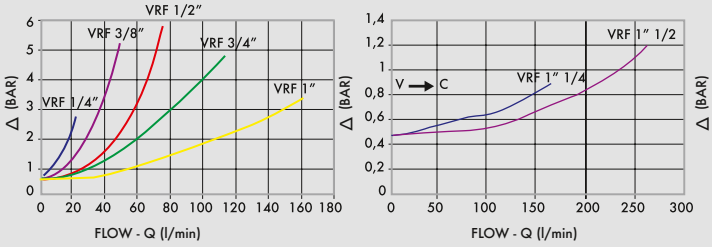

FULLY OPENED THROTTLE

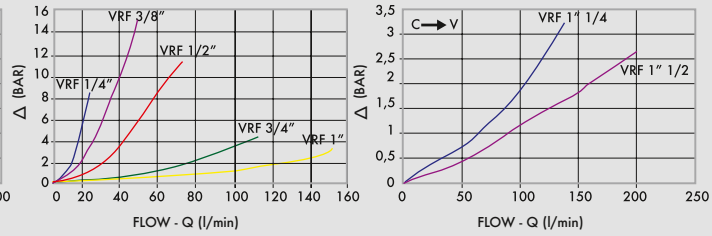

ABITEK
Hydraulik • Antriebstechnik

CODE	TYPE	MAX FLOW Lt. / min	MAX PRESSURE Bar	CRACKING PRESSURE Bar
V0540	VRF 1/4"	20	300	0,5
V0550	VRF 3/8"	45	300	0,5
V0560	VRF 1/2"	70	300	0,5
V0570	VRF 3/4"	110	250	0,5
V0580	VRF 1"	160	250	0,5
V0578	VRF 1" 1/4	210	230	0,5
V0579	VRF 1" 1/2	280	230	0,5

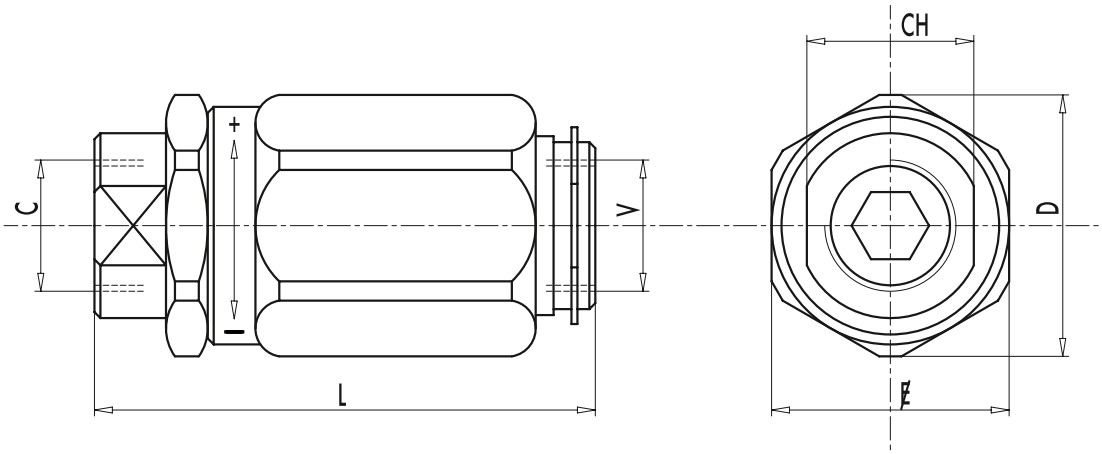

CODE	TYPE	V - C GAS	L mm	Ø mm	CH mm	D mm	WIGHT kg
V0540	VRF 1/4"	G1/4"	66,5	30	19	34	0,274
V0550	VRF 3/8"	G3/8"	73	32	24	36	0,330
V0560	VRF 1/2"	G1/2"	80	38	27	42	0,484
V0570	VRF 3/4"	G3/4"	95	46	32	51	0,824
V0580	VRF 1"	G 1"	109	55	41	60	1,314
V0578	VRF 1" 1/4	G 1" 1/4	135	80	55	85	3,310
V0579	VRF 1" 1/2	G 1" 1/2	149,5	90	62	95	4,760

Drosselventil - einstellbar

TYPE

VRB

HYDRAULIC DIAGRAM

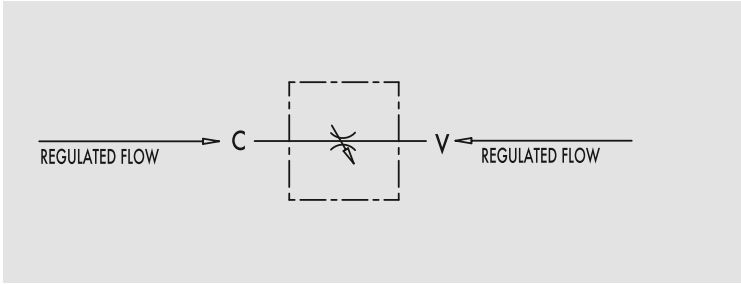

BARREL FLOW CONTROL VALVES NO CHECK

USE AND OPERATION:

This valve is used to adjust flow speed of actuators in both directions. As pressure compensation is not provided, flow adjustment depends on pressure and oil viscosity.

MATERIALS AND FEATURES:

Body: zinc-plated steel
Internal parts: hardened and ground steel
Seal: BUNA N standard
Tightness: by diameter combination. Minor leakage with closed valve

APPLICATIONS:

Connect V to the pressure flow and C to the actuator to set; when used on actuator with double pilot check valve, VRB has to be mounted between the actuator and the double pilot check valve.
Flow adjustment is made by rotating the coupling: by clockwise rotation flow increases and vice versa.
Once the flow has been set, lock the nut in order to keep the desired settings even in case of vibrations.

PRESSURE DROPS CURVE

Oil temperature: 50° C - Oil viscosity: 30 cSt

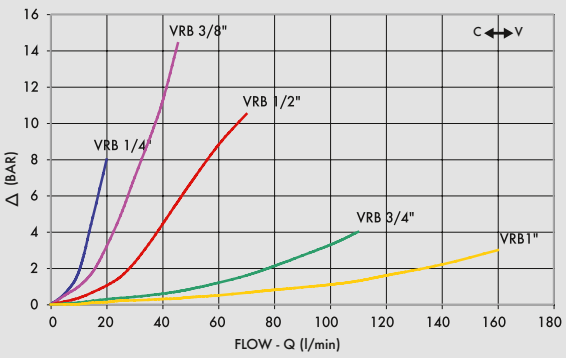

ABITEK
Hydraulik • Antriebstechnik

CODE	TYPE	MAX FLOW Lt. / min	MAX PRESSURE Bar
V0545	VRB 1/4"	20	300
V0555	VRB 3/8"	45	300
V0565	VRB 1/2"	70	300
V0575	VRB 3/4"	110	250
V0585	VRB 1"	160	250

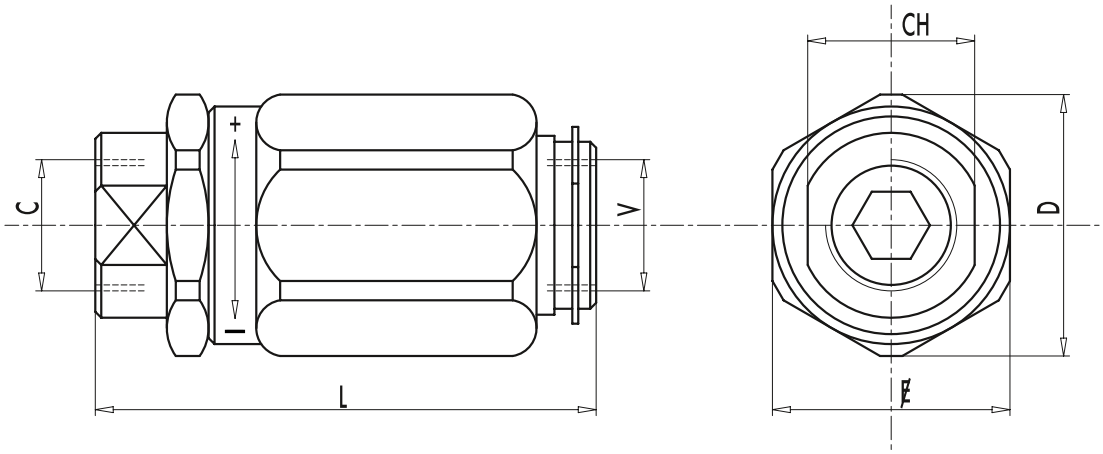

CODE	TYPE	V - C GAS	L mm	L1 mm	CH mm	D mm	WEIGHT kg
V0545	VRB 1/4"	G1/4"	66,5	30	19	34	0,266
V0555	VRB 3/8"	G3/8"	73	32	24	36	0,312
V0565	VRB 1/2"	G1/2"	80	38	27	42	0,456
V0575	VRB 3/4"	G3/4"	95	46	32	51	0,784
V0585	VRB 1"	G1"	109	55	41	60	1,222

Drosselrückschlagventil - festeingestellt

TYPE

VUSF

HYDRAULIC DIAGRAM

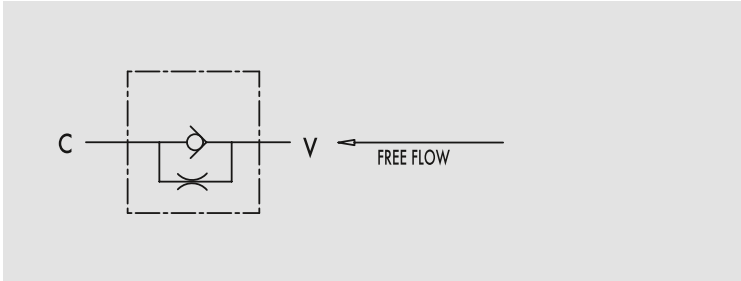

FIXED SETTING THROTTLE CHECK VALVES

USE AND OPERATION:

Flow is free in one direction and fixed in the reverse one. Flow is fixed as flow adjustment depends on the throttling hole diameter.

MATERIALS AND FEATURES:

Body: zinc-plated steel
Internal parts: hardened and ground steel
Seal: BUNA N standard
Poppet type: standard

APPLICATIONS:

Connect V to the pressure flow and C to the actuator. Flow is free from V to C and fixed in the reverse one. Throttling is obtained through one or two calibrated holes, the diameter of which has to be specified in the order.

ON REQUEST:

• other settings available: 1-3-5-8 Bar (please specify in the description the desired setting)

PRESSURE DROPS CURVE

Oil temperature: 50° C - Oil viscosity: 30 cSt

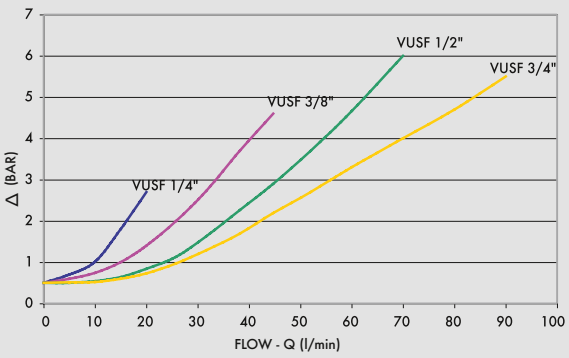

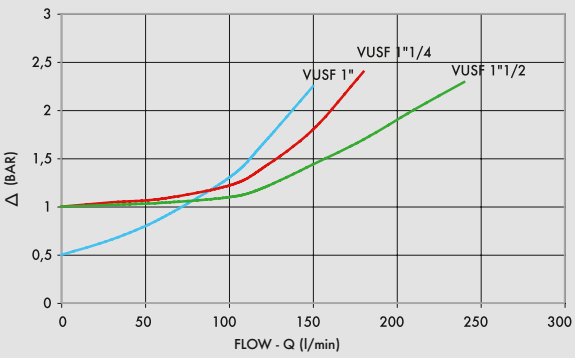

ABITEK
Hydraulik • Antriebstechnik

CODE	TYPE	MAX FLOW Lt. / min	MAX PRESSURE Bar	CRACKING PRESSURE Bar
V0590/*	VUSF 1/4"	20	350	±0,4/0,7
V0600/*	VUSF 3/8"	45	350	±0,4/0,7
V0610/*	VUSF 1/2"	70	350	±0,4/0,7
V0620/*	VUSF 3/4"	110	350	±0,4/0,7
V0630/*	VUSF 1"	160	350	±0,4/0,7
V0631/*	VUSF 1" 1/4	200	350	1
V0632/*	VUSF 1" 1/2"	300	350	1

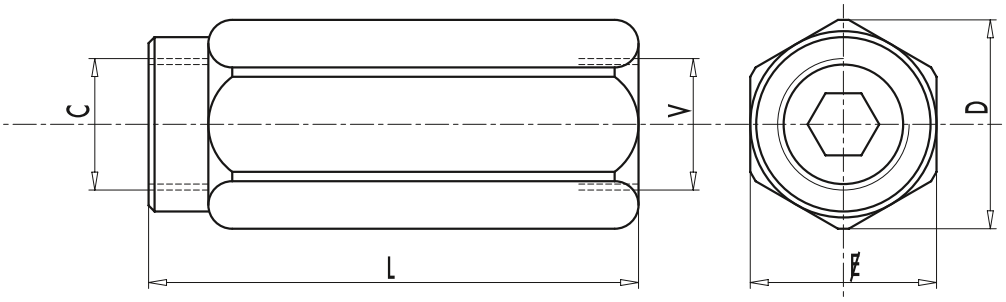

CODE	TYPE	V - C GAS	L mm	E mm	D mm	WEIGHT kg
V0590/*	VUSF 1/4"	G1/4"	62	19	21	0,104
V0600/*	VUSF 3/8"	G3/8"	68	24	26,5	0,184
V0610/*	VUSF 1/2"	G1/2"	77	30	34	0,322
V0620/*	VUSF 3/4"	G3/4"	88	36	40	0,492
V0630/*	VUSF 1"	G1"	105	41	46	0,676
V0631/*	VUSF 1" 1/4	G1" 1/4	135	55	63	1,646
V0632/*	VUSF 1" 1/2	G1" 1/2	145	60	69	1,950

*: CODE/1F: valve with calibrated hole, please specify hole's dimension. Ordering example: VUSF 1/4" 1 HOLE DIAM. 2 mm • PART NR = V0590/1F

*: CODE/2F: valve with 2 calibrated holes, please specify holes dimension. Ordering example: VUSF 1/2" 2 HOLES DIAM. 1 mm • PART NR = V0610/2F

Drosselrückschlagventil mit Handrad 90°

TYPE

VRFU 90°

HYDRAULIC DIAGRAM

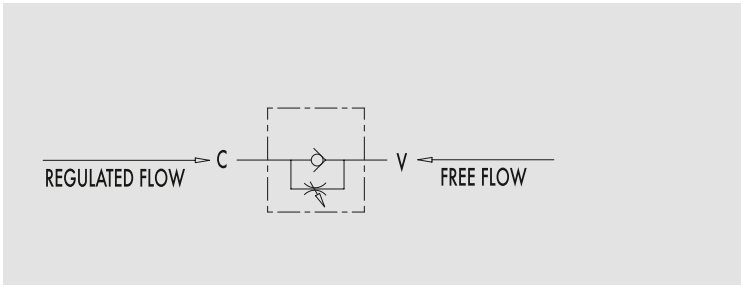

90° FLOW REGULATOR VALVES

USE AND OPERATION:
This valve is used to adjust flow speed of actuators in one direction; flow is free in the reverse one. As pressure compensation is not provided, flow adjustment depends on pressure and fluid viscosity. High adjustment sensitivity.

MATERIALS AND FEATURES:
Body: zinc-plated steel
Internal parts: hardened and ground steel
Seal: BUNA N standard
Tightness: needle type. Minor leakage with closed valve.

APPLICATIONS:
Connect V to the pressure flow and C to the actuator to set; flow is adjust from C to V and is free in the reverse direction. When used on actuator with double pilot check valve, VRFU 90° has to be mounted between the actuator and the double pilot check valve. Flow adjustment is made by rotating the plastic hand knob after loosening the side locking screw. This particular configuration allows an accurate and sensitive adjustment.

PRESSURE DROPS CURVE

Oil temperature: 50° C - Oil viscosity: 30 cSt

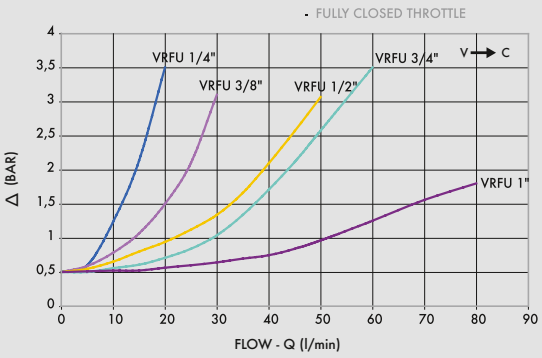

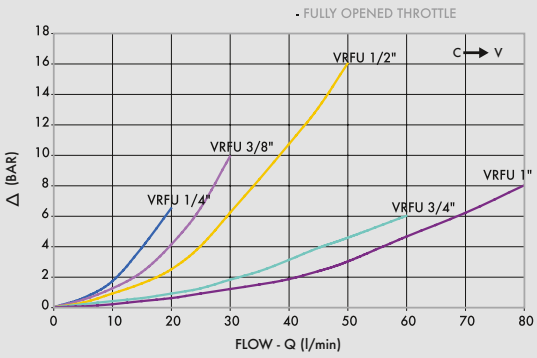

ABITEK
Hydraulik • Antriebstechnik

CODE	TYPE	MAX FLOW Lt. / min	MAX PRESSURE Bar	CRACKING PRESSURE Bar
V0581	VRFU 90° 1/4"	15	350	0,5
V0582	VRFU 90° 3/8"	30	350	0,5
V0583	VRFU 90° 1/2"	50	350	0,5
V0588	VRFU 90° 3/4"	80	280	0,5
V0576	VRFU 90° 1"	110	250	0,5

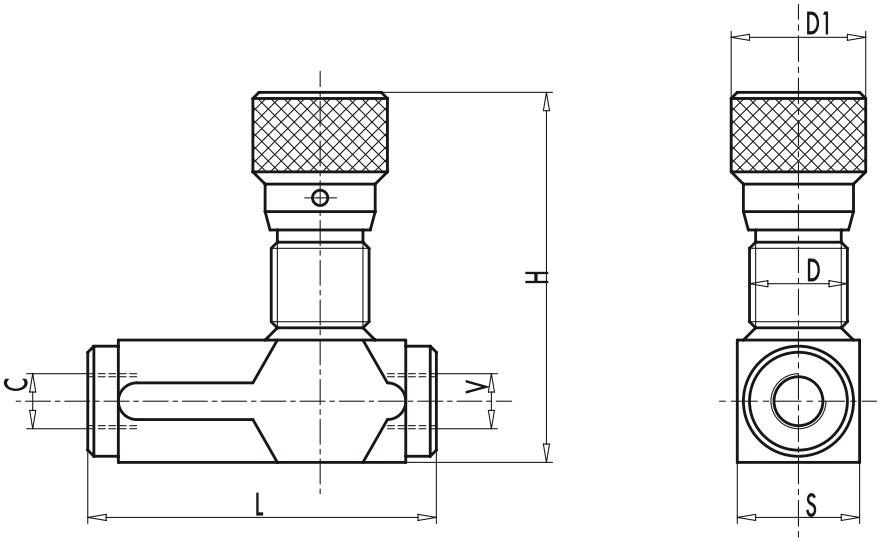

CODE	TYPE	V - C GAS	L mm	D mm	D1 mm	H mm	S mm	WEIGHT kg
V0581	VRFU 90° 1/4"	G1/4"	73	M22X1,5	32	82	25	0,416
V0582	VRFU 90° 3/8"	G3/8"	83	M22X1,5	32	82	25	0,420
V0583	VRFU 90° 1/2"	G1/2"	94	M22X1,5	32	87	30	0,582
V0588	VRFU 90° 3/4"	G3/4"	118	M35X1,5	42	108,5	40	1,360
V0576	VRFU 90° 1"	G1"	135	M35X1,5	42	126	40	1,390

Drosselventil mit Handrad 90°

TYPE

VRFB 90°

HYDRAULIC DIAGRAM

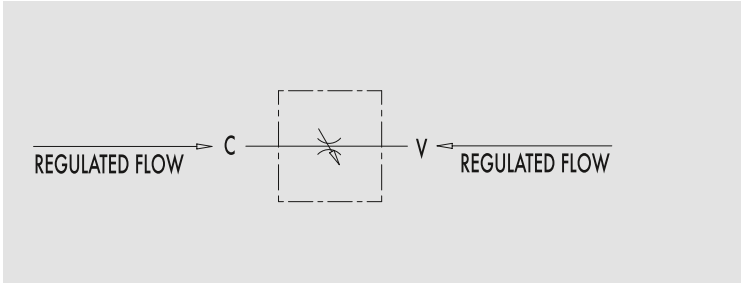

90° FLOW REGULATOR VALVES

USE AND OPERATION:
This valve is used to adjust flow speed of actuators in both directions. As pressure compensation is not provided, flow adjustment depends on pressure and fluid viscosity. High adjustment sensitivity.

MATERIALS AND FEATURES:
Body: zinc-plated steel
Internal parts: hardened and ground steel
Seal: BUNA N standard
Tightness: needle type. Minor leakage with closed valve.

APPLICATIONS:
Connect a port to the pressure. Flow will be adjusted in the other one. When used on actuator with double pilot check valve, VRFB 90° has to be mounted between the actuator and the double pilot check valve. Flow adjustment is made by rotating the plastic hand knob after loosening the side locking screw. This particular configuration allows an accurate and sensitive adjustment.

DROPS CURVE

Oil temperature: 50° C - Oil viscosity: 30 cSt

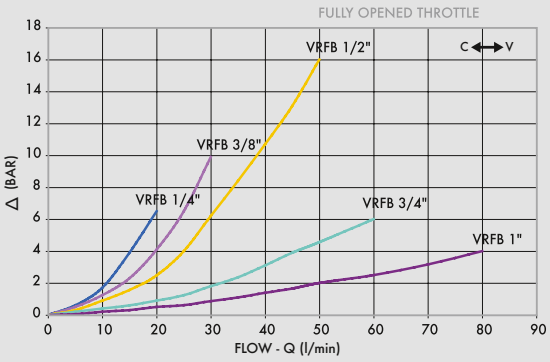

ABITEK
Hydraulik • Antriebstechnik

CODE	TYPE	MAX FLOW Lt. / min	MAX PRESSURE Bar
V0584	VRFB 90° 1/4"	15	350
V0586	VRFB 90° 3/8"	30	350
V0587	VRFB 90° 1/2"	50	350
V0589	VRFB 90° 3/4"	80	280
V0577	VRFB 90° 1"	110	250

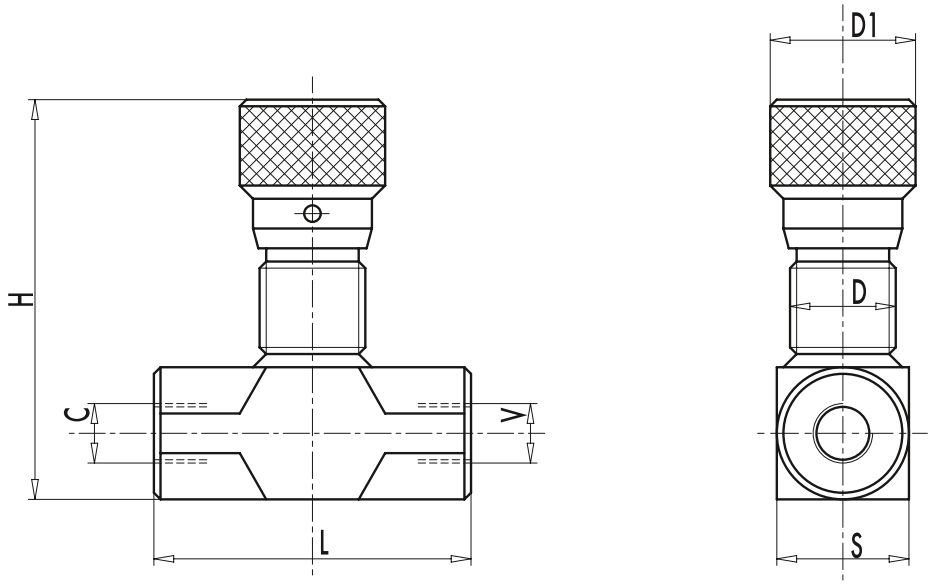

CODE	TYPE	V - C GAS	L mm	D mm	D1 mm	H mm	S mm	WEIGHT kg
V0584	VRFB 90° 1/4"	G1/4"	60	M22X1,5	32	82	25	0,366
V0586	VRFB 90° 3/8"	G3/8"	61	M22X1,5	32	82	25	0,352
V0587	VRFB 90° 1/2"	G1/2"	70	M22X1,5	32	87	30	0,468
V0589	VRFB 90° 3/4"	G3/4"	89	M35X1,5	42	108,5	40	1,080
V0577	VRFB 90° 1"	G1"	90	M35X1,5	42	129	40	1,000

Drosselrückschlagventil mit Handrad - ölstromunempfindlich 90°

HYDRAULIC DIAGRAM

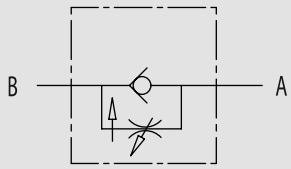

COMPENSATED 90° FLOW REGULATOR VALVES

USE AND OPERATION:
This valve is used to adjust flow speed of actuators in one direction; flow is free in the reverse one. The internal compensation system allows to keep a constant speed even when the load varies. High adjustment sensitivity.

MATERIALS AND FEATURES:
Body: zinc-plated steel
Internal parts: hardened and ground steel
Seal: BUNA N standard
Tightness: needle type.

APPLICATIONS:
Connect A to the pressure flow and B to the actuator to set; flow is adjust from B to A and is free in the reverse direction. Flow adjustment is made by rotating the hand knob after loosening the side locking screw. This particular configuration allows an accurate and sensitive adjustment.

PRESSURE DROPS CURVE

Oil temperature: 50° C - Oil viscosity: 30 cSt

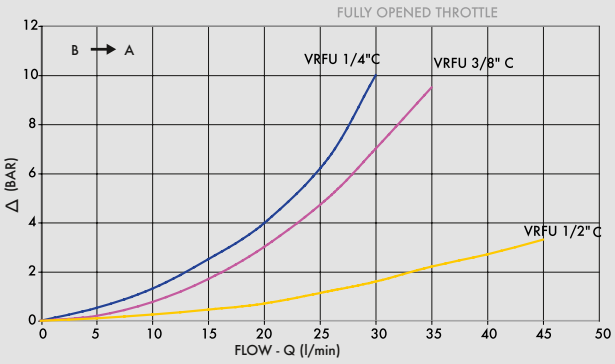

ABITEK
Hydraulik • Antriebstechnik

CODE	TYPE	MAX FLOW from A to B Lt. / min	MAX FLOW from B to A Lt. / min	MAX PRESSURE Bar
V0581/C	VRFU 90° 1/4" COMPENSATO	17	25	250
V0582/C	VRFU 90° 3/8" COMPENSATO	17	30	250
V0583/C	VRFU 90° 1/2" COMPENSATO	28	45	250

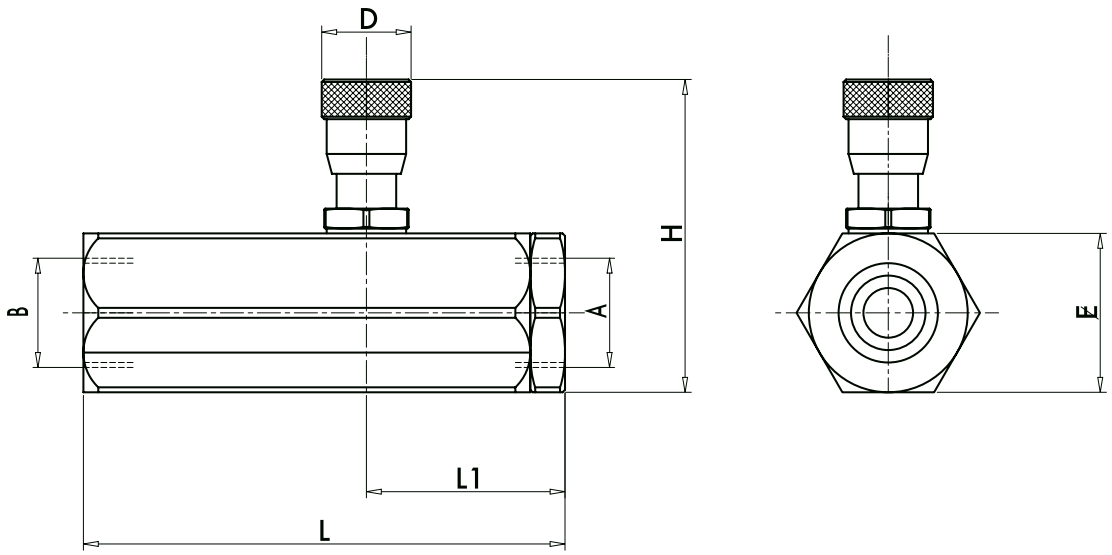

CODE	TYPE	A . B GAS	L mm	L1 mm	D1 mm	H MAX mm	E mm	WEIGHT kg
V0581/C	VRFU 90° 1/4" COMPENSATO	G1/4"	88	37	20	64	32	0,524
V0582/C	VRFU 90° 3/8" COMPENSATO	G3/8"	88	37	20	64	32	0,510
V0583/C	VRFU 90° 1/2" COMPENSATO	G1/2"	107	46	20	76	36	0,700

3-Wege Stromregelventil

TYPE

VPR3

HYDRAULIC DIAGRAM

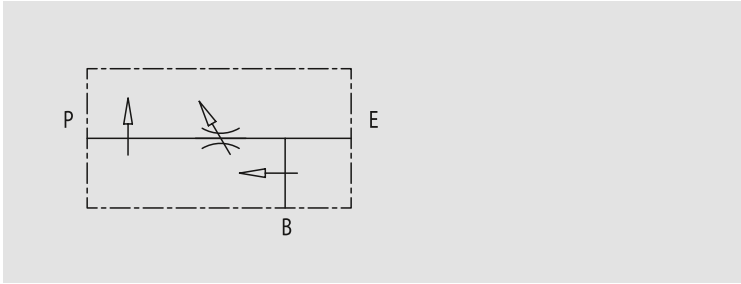

3 PORT FLOW CONTROL VALVE ONGOING PRESSURE LINE

USE AND OPERATION:

This valve enables to keep "P" flow constant to a certain setting, independently of the required pressure or the inlet flow of the valve. Exceeded flow is drained in "B" and it is available for a second use. Also port "B" is insensitive to pressure changes but not to flow changes.

MATERIALS AND FEATURES:

Body: zinc-plated steel
Internal parts: hardened and ground steel
Seal: BUNA N standard
Tightness: by diameter combination. Minor leakage (few drops per minute)

APPLICATIONS:

Connect E to the pressure flow and P to the actuator or to a line of an hydraulic circuit where flow adjustment is needed. Connect B to the tank or to a second actuator. To adjust inlet pressure in P screw in or off hand wheel after loosening the locknut.

COMPENSATION CURVE

Oil temperature: 50° C - Oil viscosity: 30 cSt

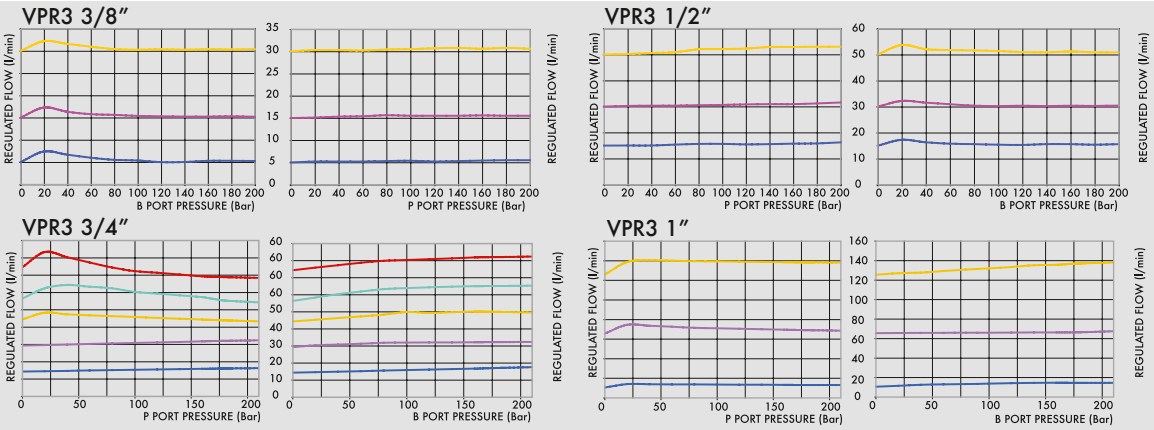

ABITEK
Hydraulik • Antriebstechnik

CODE	TYPE	MAX INLET FLOW Lt. / min	MAX ADJUSTED FLOW Lt. / min	MAX PRESSURE Bar
V1060	VPR3 3/8"	60	50	350
V1070	VPR3 1/2"	80	60	350
V1080	VPR3 3/4"	120	100	350
V1090	VPR3 1"	200	170	350

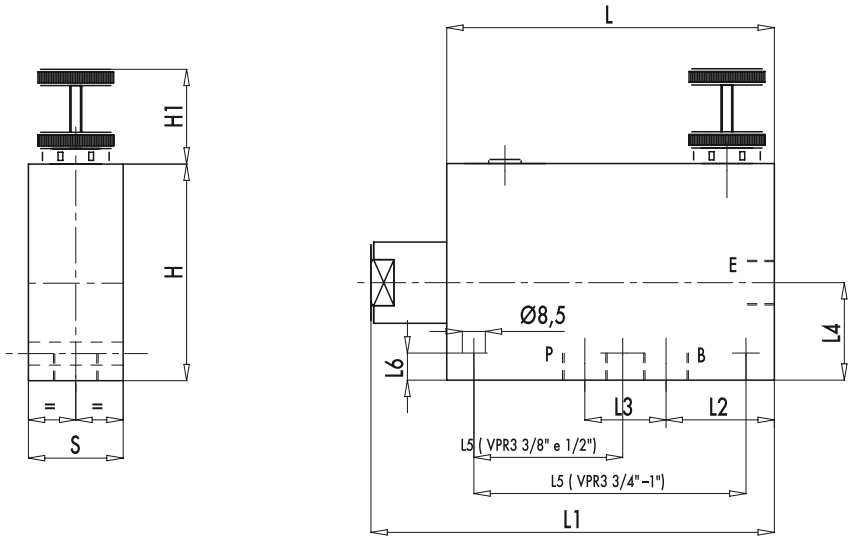

CODE	TYPE	E - P . B GAS	L mm	L1 mm	L2 mm	L3 mm	L4 mm	L5 mm	L6 mm	H mm	H1 mm	S mm	WEIGHT kg
V1060	VPR3 3/8"	G3/8"	121	147	40	32	36	55	12	80	35	35	2,530
V1070	VPR3 1/2"	G1/2"	121	147	37	36	36	55	12	80	35	35	2,470
V1080	VPR3 3/4"	G3/4"	155	187	50	44	37	115	10	90	35	50	4,958
V1090	VPR3 1"	G1"	155	187	46	58	47	115	12	100	35	50	5,268

3-Wege Stromregelventil mit drucklosem Restölstrom

TYPE

RFP3

HYDRAULIC DIAGRAM

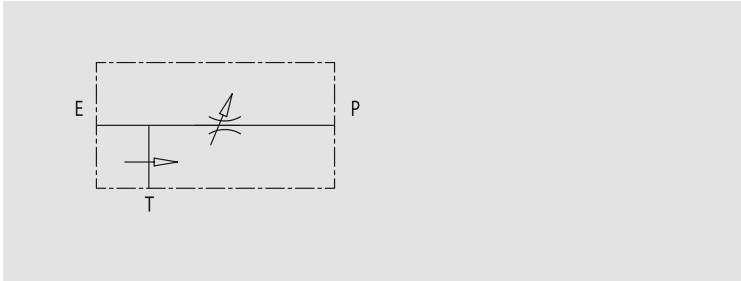

3 PORT FLOW CONTROL VALVE EXCESS TO TANK

USE AND OPERATION:

This valve enables to keep "P" flow constant to a certain setting, independently of the required pressure or the inlet flow of the valve. Exceeded flow is drained directly in T (tank).

MATERIALS AND FEATURES:

Body: zinc-plated steel
Internal parts: hardened and ground steel
Seal: BUNA N standard
Tightness: by diameter combination. Minor leakage (few drops per minute)

APPLICATIONS:

Connect E to the pressure flow and P to the net where flow adjustment is needed. Connect T to the tank. To adjust inlet pressure in P screw in or off hand wheel after loosening the locknut.

COMPENSATION CURVE

Oil temperature: 50° C - Oil viscosity: 30 cSt

RFP3 3/8"

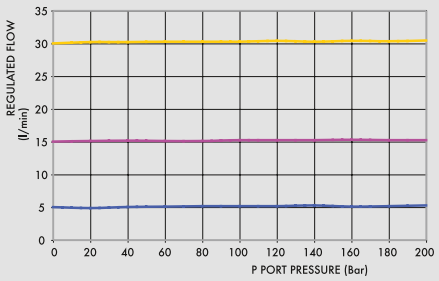

RFP3 1/2"

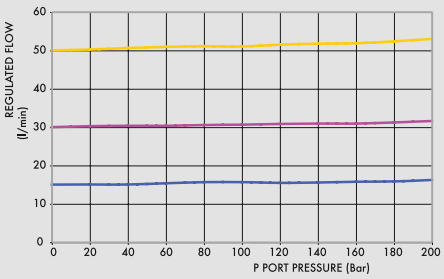

RFP3 3/4"

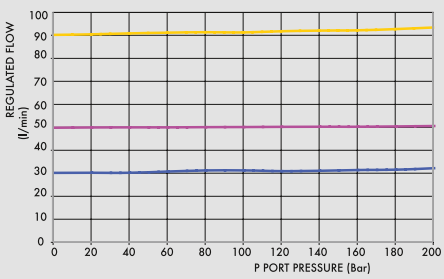

ABITEK
Hydraulik • Antriebstechnik

CODE	TYPE	MAX INLET FLOW Lt. / min	MAX ADJUSTED FLOW Lt. / min	MAX PRESSURE Bar
V1110	RFP3 3/8"	60	50	350
V1120	RFP3 1/2"	80	60	350
V1130	RFP3 3/4"	120	100	350

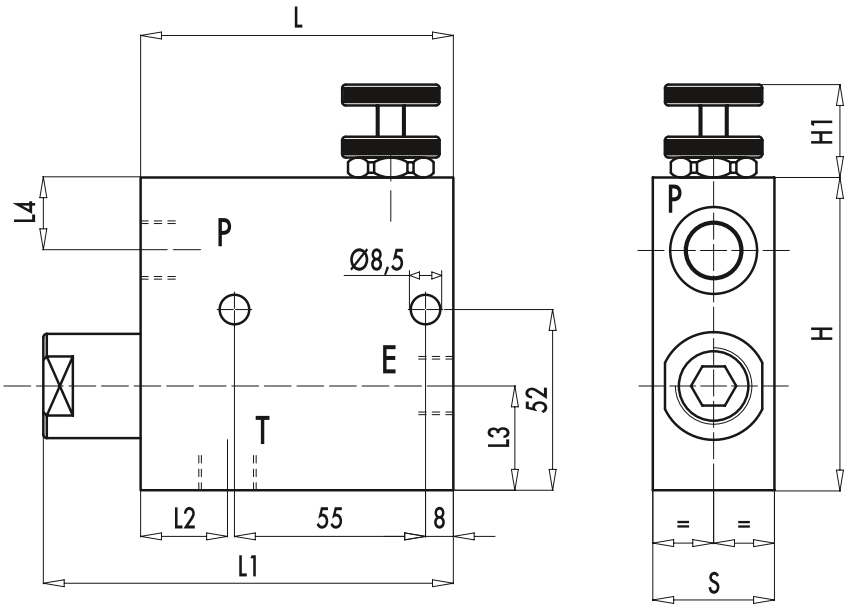

CODE	TYPE	E - P . T GAS	L mm	L1 mm	L2 mm	L3 mm	L4 mm	H mm	H1 mm	S mm	WEIGHT kg
V1110	RPF3 3/8"	G3/8"	90	118	25	32	20	90	40	35	2,170
V1120	RPF3 1/2"	G1/2"	90	118	25	32	20	90	40	35	2,096
V1130	RPF3 3/4"	G3/4"	90	122	27	36	19	102	40	50	3,344

3-Wege Stromregelventil mit drucklosem Restölstrom und Umgehungsrückschlagventil

TYPE

RFP3 VU

HYDRAULIC DIAGRAM

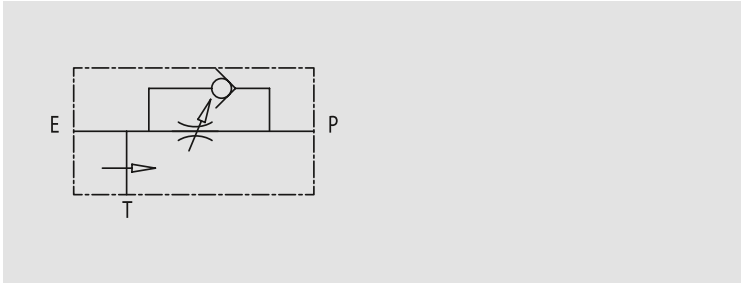

3 WAYS FLOW CONTROL VALVE EXCESS TO TANK WITH CHECK VALVE

USE AND OPERATION:

This valve enables to keep "P" flow constant to a certain setting, independently of the required pressure or the inlet flow of the valve. Exceeded flow is drained directly in T (tank). The check valve allows those applications where we require the return of the free flow.

MATERIALS AND FEATURES:

Body: zinc-plated steel
Internal parts: hardened and ground steel
Seal: BUNA N standard
Tightness: by diameter combination.
Minor leakage (few drops per minute)

APPLICATIONS:

Connect E to the pressure flow and P to the net where flow adjustment is needed. Connect T to the tank. To adjust inlet pressure in P screw in or off hand wheel after loosening the locknut.

COMPENSATION CURVE

Oil temperature: 50° C - Oil viscosity: 30 cSt

RFP3 C/VU3/8"

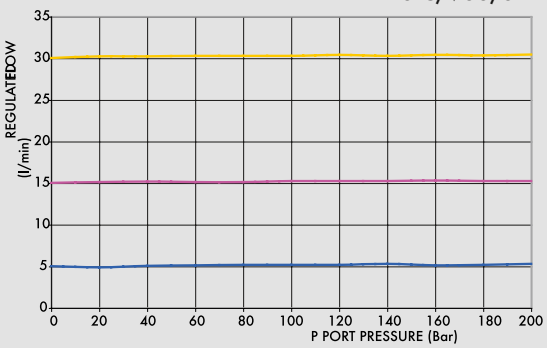

RFP3 C/VU1/2"

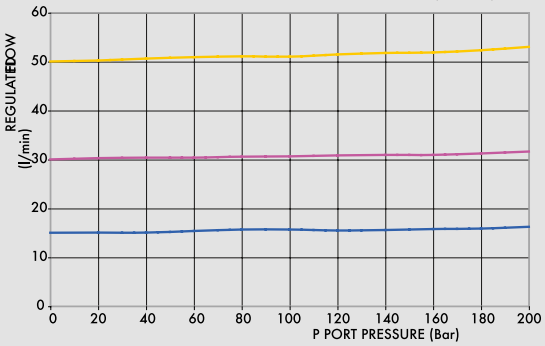

ABITEK
Hydraulik • Antriebstechnik

CODE	TYPE	MAX INLET FLOW Lt. / min	MAX ADJUSTED FLOW Lt. / min	MAX PRESSURE Bar
V1110/VU	RFP3 3/8" c/VU	60	50	350
V1120/VU	RFP3 1/2" c/VU	80	60	350

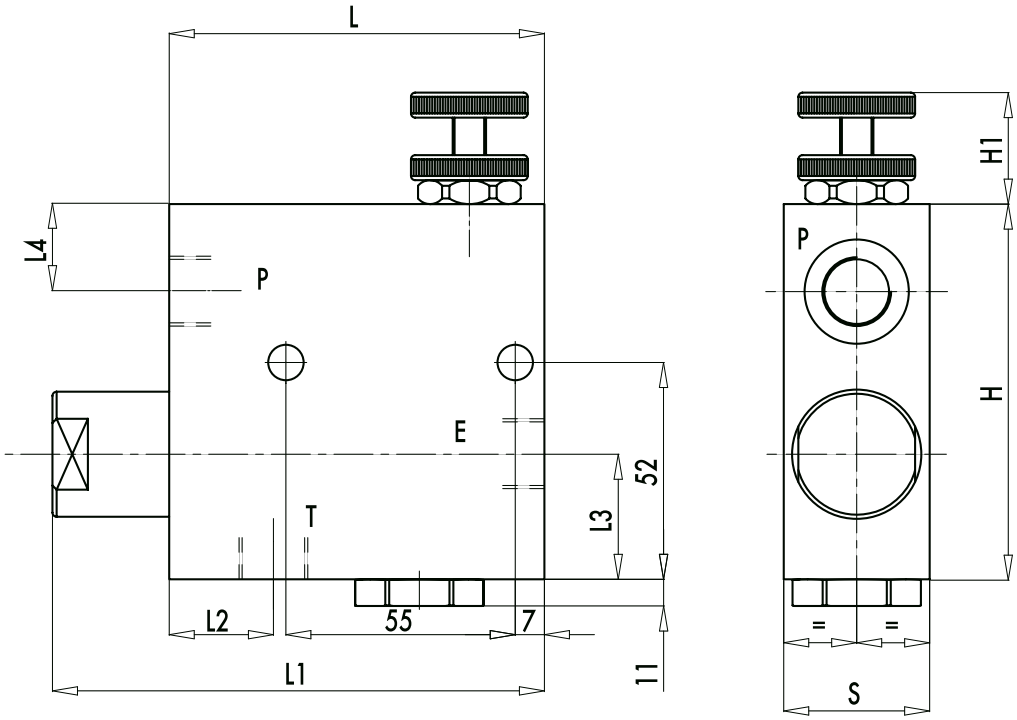

CODE	TYPE	E - P . T GAS	L mm	L1 mm	L2 mm	L3 mm	L4 mm	H mm	H1 mm	S mm	WEIGHT kg
V1110/VU	RPF3 3/8" c/VU	G3/8"	90	118	25	32	20	90	35	40	2,200
V1120/VU	RPF3 1/2" c/VU	G1/2"	90	118	25	32	20	90	35	40	2,100

3-Wege Stromregelventil mit drucklosem Restölstrom flanschbar für Danfoss OMP/OMR

TYPE

RFP3 OMP/OMR

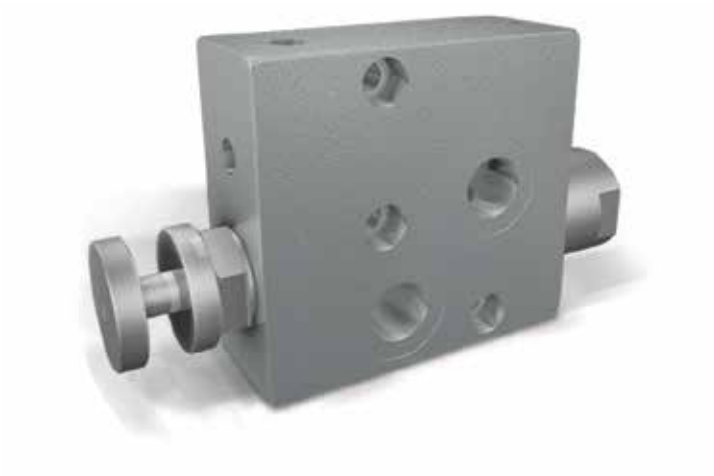

HYDRAULIC DIAGRAM

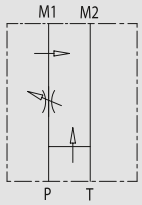

FLOW CONTROL VALVE EXCESS TO TANK FLANGEABLE ON DANFOSS MOTORS OMP/OMR

USE AND OPERATION:
This valve enables to keep "P" flow constant to a certain setting, independently of the required pressure or the inlet flow of the valve. Exceeded flow is drained directly in T (tank).

MATERIALS AND FEATURES:
Body: zinc-plated steel
Internal parts: hardened and ground steel
Seal: BUNA N standard
Tightness: by diameter combination.
Minor leakage (few drops per minute)

APPLICATIONS:
Connect M1 and M2 to the motor and P and T to the pressure.

COMPENSATION CURVE

Oil temperature: 50° C - Oil viscosity: 30 cSt

RFP3 1/2" OMP-OMR

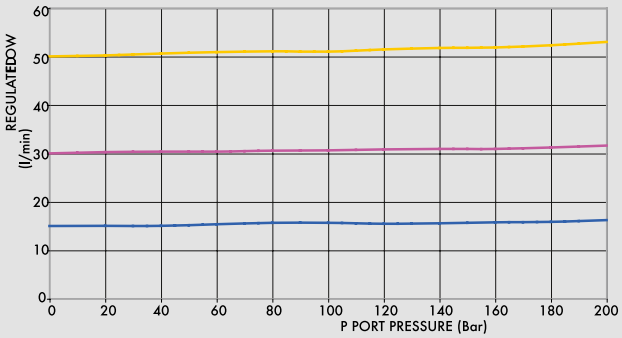

ABITEK
Hydraulik • Antriebstechnik

CODE	TYPE	MAX INLET FLOW Lt. / min	MAX ADJUSTED FLOW Lt. / min	MAX PRESSURE Bar
V1121	RFP3 1/2" OMP/OMR	60	50	350

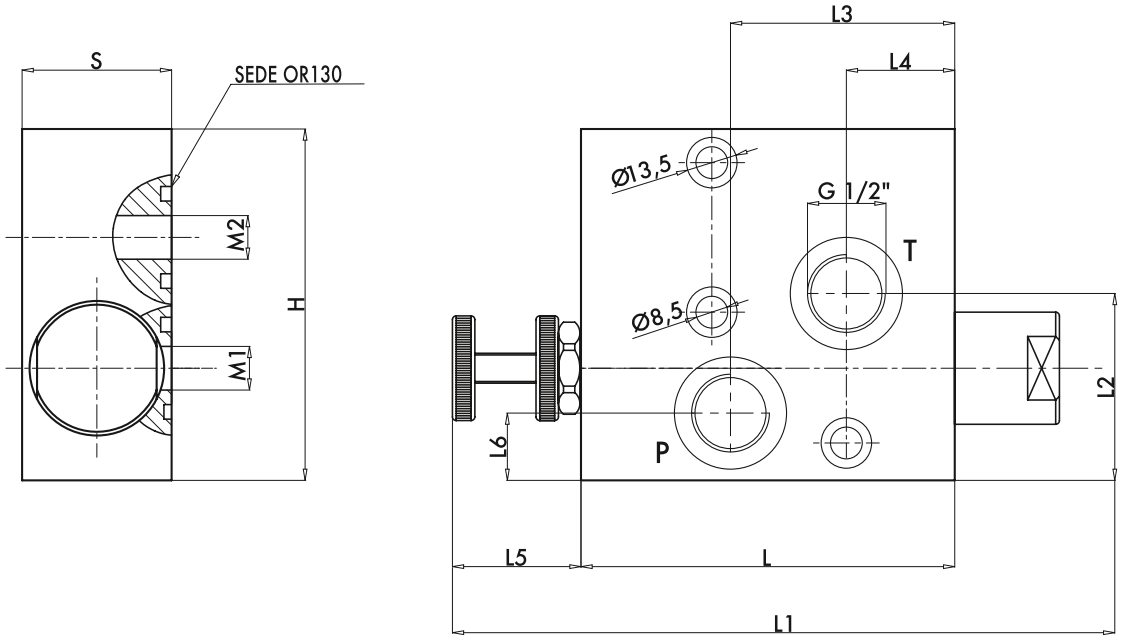

CODE	TYPE	P . T GAS	L mm	L1 mm	L2 mm	L3 mm	L4 mm	L5 mm	L6 mm	H mm	S mm	WEIGHT kg
V1121	RFP3 1/2" OMP/OMR	G1/2"	100	168	50	60	29	40	18	94	40	1,950

3-Wege Stromregelventil mit drucklosem Restölstrom für Danfoss Motoren OMS

TYPE

RFP3 OMS

HYDRAULIC DIAGRAM

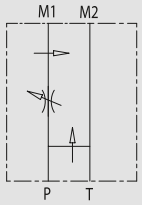

FLOW CONTROL VALVE EXCESS TO TANK FLANGEABLE ON DANFOSS MOTORS OMS

USE AND OPERATION:
This valve enables to keep "P" flow constant to a certain setting, independently of the required pressure or the inlet flow of the valve. Exceeded flow is drained directly in T (tank).

MATERIALS AND FEATURES:
Body: zinc-plated steel
Internal parts: hardened and ground steel
Seal: BUNA N standard
Tightness: by diameter combination. Minor leakage (few drops per minute)

APPLICATIONS:
Connect M1 and M2 to the motor and P and T to the pressure.

ABITEK
Hydraulik • Antriebstechnik

CODE	TYPE	MAX INLET FLOW Lt. / min	MAX ADJUSTED FLOW Lt. / min	MAX PRESSURE Bar
V1122	RFP3 1/2" OMS	60	50	350

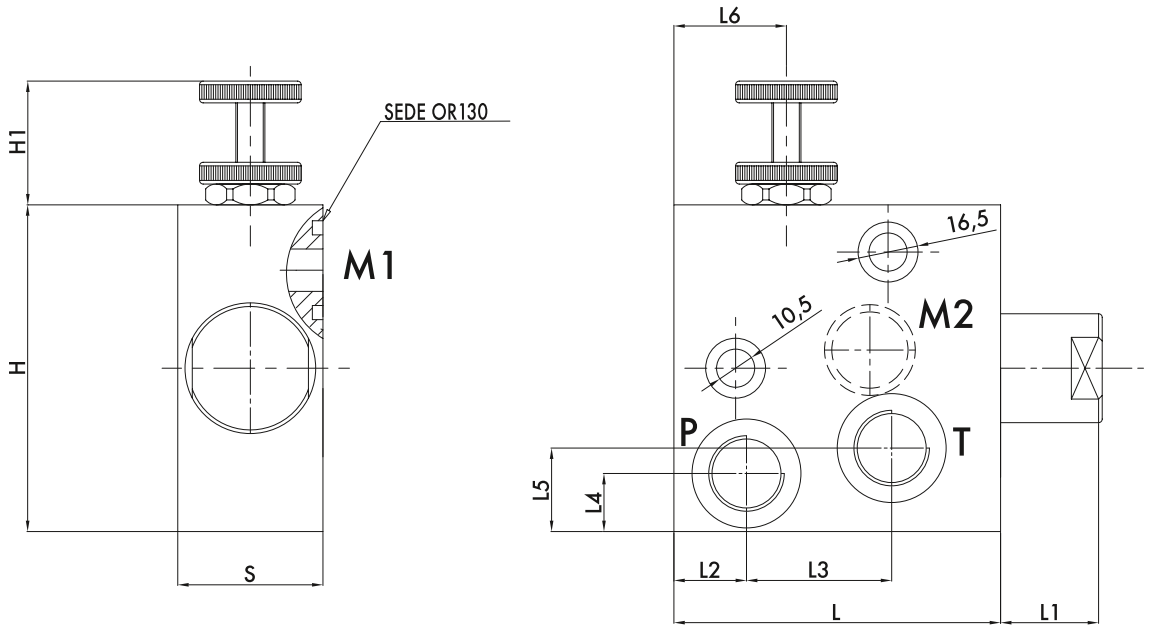

CODE	TYPE	P . T GAS	L mm	L1 mm	L2 mm	L3 mm	L4 mm	L5 mm	L6 mm	H mm	H1 mm	S mm	WEIGHT kg
V1122	RFP3 1/2" OMS	G1/2"	90	26	20	40	16	23	31	90	35	40	2,410

Drosselschraube

TYPE

VS

HYDRAULIC DIAGRAM

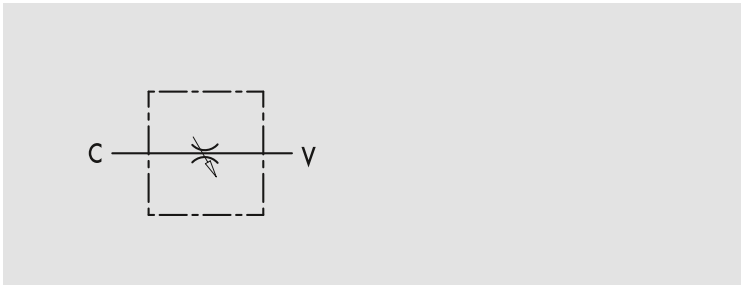

THROTTLE SCREW

USE AND OPERATION:
This screw is used on actuators as bi-directional restrictor when adjustment can be a little imprecise or when small dimensions don't allow mounting of an in-line restrictor. It's a very cheap solution, but it doesn't guarantee the same security of a restrictor valves.

MATERIALS AND FEATURES:
Body: zinc-plated steel

APPLICATIONS:

Screw in the screw directly on actuator's ports

ABITEK
Hydraulik • Antriebstechnik

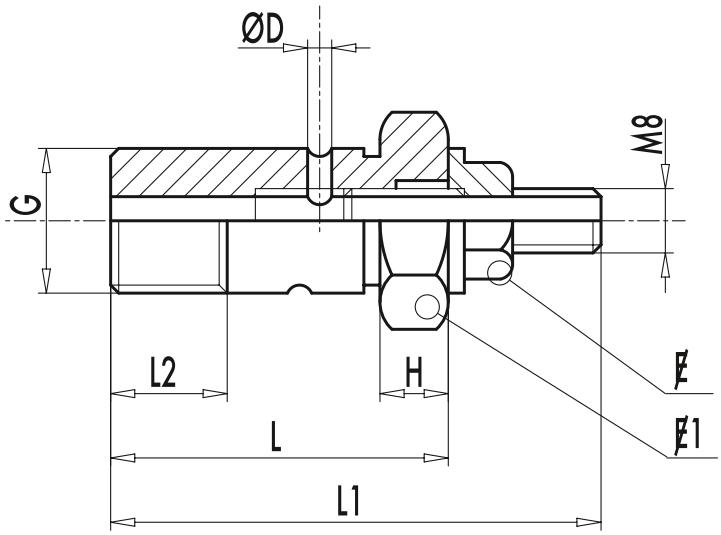

CODE	TYPE	G GAS	L mm	L1 mm	L2 mm	H mm	D mm	Ø mm	Ø1 mm	WEIGHT kg
R1351	VITE STROZZATRICE 1/4"	G1/4"	36	53	15	7	2,5	13	19	0,046
R1361	VITE STROZZATRICE 3/8"	G3/8"	39	58	15	8	3	13	22	0,074
R1371	VITE STROZZATRICE 1/2"	G1/2"	46	62	16	8	4	13	27	0,136